Dati tecnici - Technical data

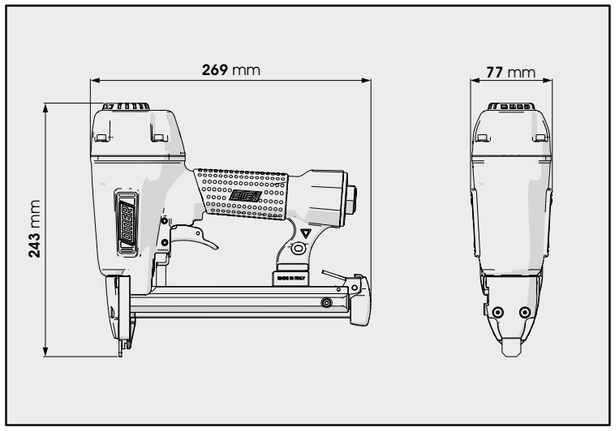

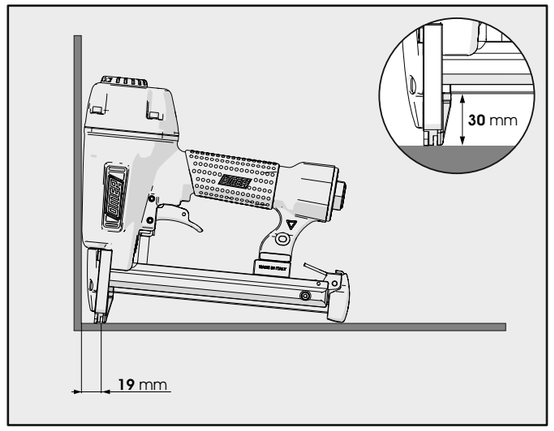

Caratteristiche - Features

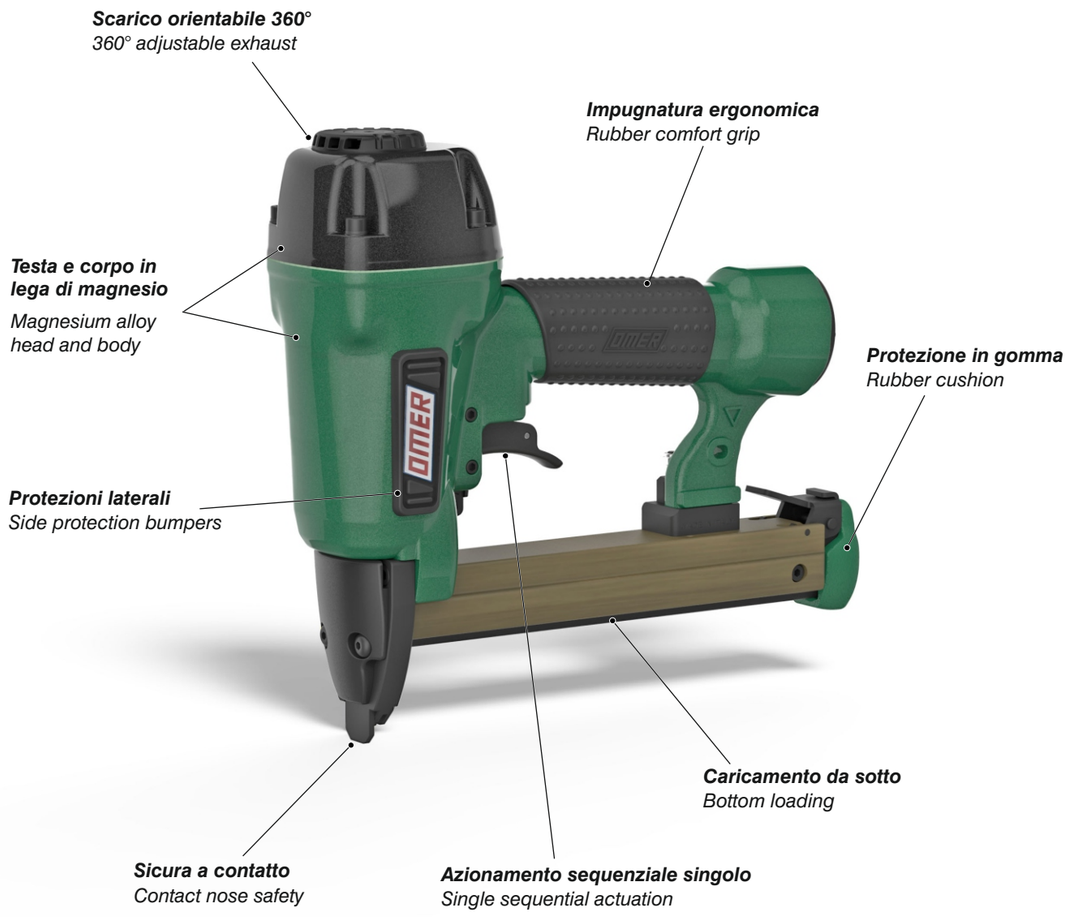

OMER®

Manuale d'uso, manutezione e parti di ricambio	**Parte 2**
Use, maintenance and spare parts manual	**Part 2**
Gebrauchsanweisung, Instandhaltungsrichtlinien und Ersatzteile	**Teil 2**
Manuel d'utilisation, entretien et pièces de rechange	**Partie 2**
Manual de uso, mantenimiento y repuestos	**Part 2**
Εγχειριδιο χρησης, συντηρησης και ανταλλακτικων	2° Μερος
Manual de utilização, manutenção e partes sobresselentes	**Parte 2**
Handleiding voor gebruik, onderhoud en wisselstukken	**Deel 2**
Brugsanvisning, vedligeholdelse og reservedelslite	**Del 2**



1749200_MCF12_4 051219 IV

MCF.12

cod. 1749200

Dati tecnici Technical data Technische daten	Données techniques Datos tècnicos Τεχνικα χαρακτηριστικα	Dados tècnicos Technischengegevens Tekniske data	
Misure impiegabili mm Usable lenghts mm Gebrauchliche Längen mm	Mesures utilisable mm Medidas que se pueden amplear mm Διαστασεισ σε μμ	Medidas que se podem utilizar mm Te gebruiken engtes in mm Brugbare laengder i mm	**7 - 9 - 12**
Capacità caricatore n° punti Magazine capacity No. of fasteners Magazinkapazität Nägel	Capacitè chargeur n° de points Capacidad cargador n° puntos Δυνατοτητα γεμιστερα, σφνδετερεσ	Capacitade carregador n° pontos Capaciteit magazijn in aantal spijkers Kapacitet af magasin antal klemmme	**70**
Pressione d'esercizio Working pressure Betriebsdruck	Pression de fonctionnement Presiòn de trabajo Πιεση λειτοφργιασ ατμ.	Pressao de trabalho Werkdruk Arbejds tryk bar	**5÷7,5 bar** **70÷105 psi**
Consumo aria litri/colpo Air consumption litres/shot Luftverbrauch Liter/Schlag	Consommation air litre/coup Consumo aire-litros/golpe Καταναλοση αερα λ/ξτφπημα	Consumo ar litro/golpe Luchtverbruik liter/schot Luftforbrug liter/skud	**0,75**
Peso kg Weight kg Gewicht kg	Poids kg Peso kg Βαροσ κγ	Peso kg Gewicht in kg Vaegt kg	**1,92**
Dimensioni (AxBxH) mm Dimensions mm Große mm	Dimension mm Dimensiones mm Δυνατοτητα γεμιστερα , σφνδετερεσ	Dimencoes mm Afmetingen in mm Dimensioner mm	**269x77x243**
EN 12549 :1999 ISO 11201 :1995			
Pressione sonora in pos. operatore Sound pressure at the workstation Lärmintensität am Arbeitsplatz	Pression acoustique près de l'opérateur Presiòn sonora en posición encargado Ακουστικη πιεση στη θεση χειριστου	Intensidade sonora perto do operador Geluidssterkte op de werkplek Lydstyrke på operatorposten	**86,1 dB(A)**
EN 12549 :1999 ISO 3744 :1994			
Potenza sonora emessa Emitted sound power Ausgestrahlte Lärmintensität	Puissance acoustique émise Potencia sonora emitida Ακουστικη ισχυ	Potência sonora emitida Uitgestraalde geluidssterkte Udsendt lydstryrke	**94,9 dB(A)**
EN 28662 :1992 ISO 5349 :1986 ISO 8662 -11			
Valore medio ponderato di vibrazione sull'impugnatura max.33 colpi Weighted mean value of vibration on the grip max.33 shots Mitteler Vibrationswert, am Griff gemessen max.33 Schäge	Valeur moyenne pondèrèe de vibration mesurèe sur la poignèe max.33 coups Valor medio ponderado de vibracion medida en la empunadura max.33 golp Μεσοσ οροσ μετρησησ κραδασμον στη ξειρολαβη μαξ.33 ξτφπημα	Valor medio ponderado de vibracao medida no punho max.33 golpes Gewogen gemiddelde vibratiewaarde max.33 schot Middelvaerdi af vibrationer pa handtaget max.33 skud	**2,6 m/s²**

Tipo di punto
Type of fastener
Befestigungselement
Type d'agrafe
Tipo de punto
Τυπος καρφιου
Tipo de ponto
Type nietjes
Tilspændingstype

MINI CF

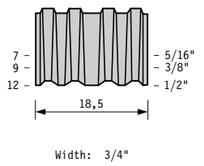

omer s.p.a. Via Foresto 42 - 31058 SUSEGANA TV ITALY Tel.0438455318 Fax 0438455530 E-mail: omer@omer.it www.omer.it

Parti di ricambio - Spare parts - Ersatzteile - Pièces de rechange - Piezas de repuesto
Ανταλλακτικα - Partes sobresselentes - Wisselstukken - Reservedele

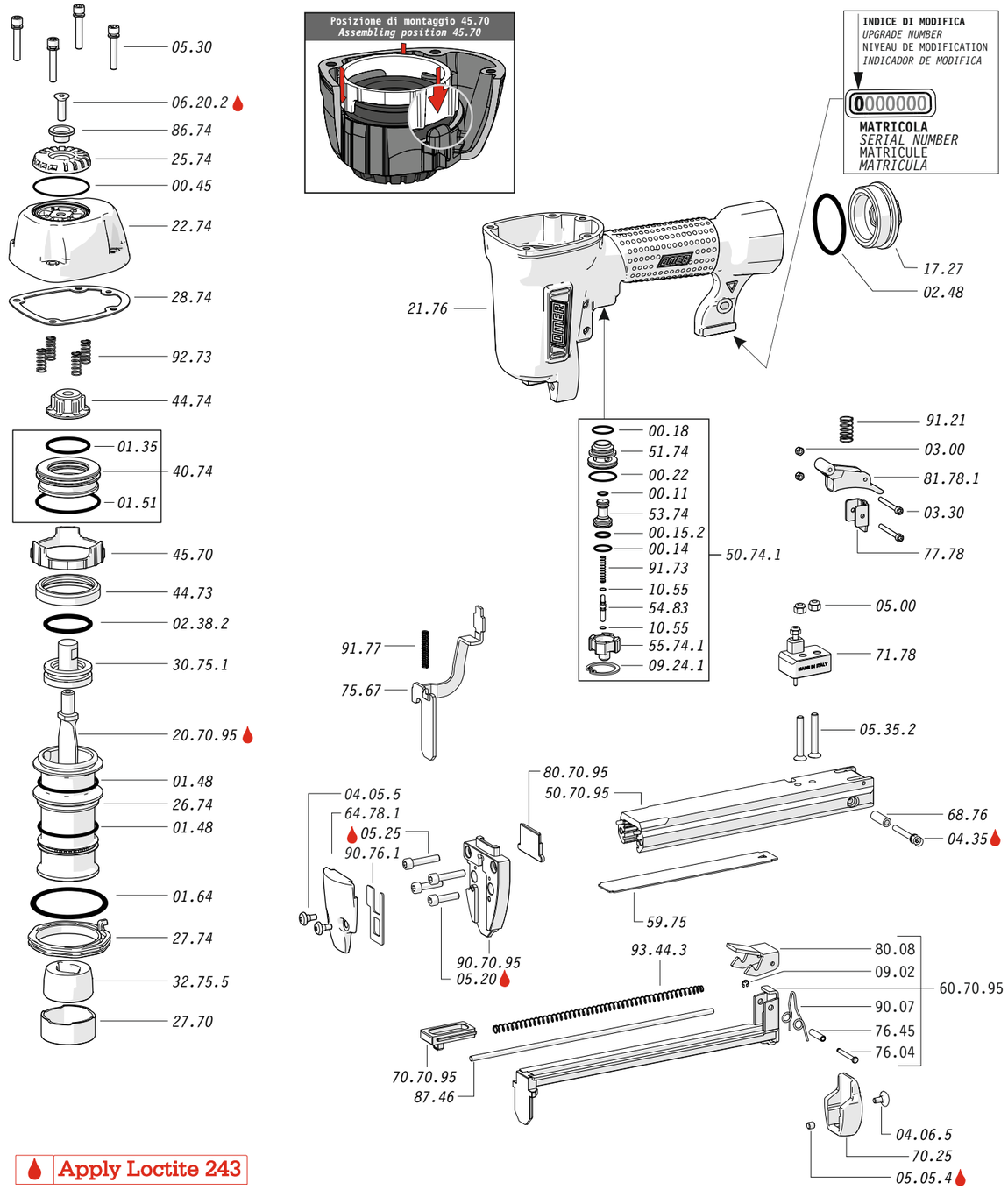

Apply Loctite 243

Dotazioni - Equipment - Ausrüstung - Équipements - Equipamiento - Παρεχομενα
Equipamento - Uitrusting - Udstyr

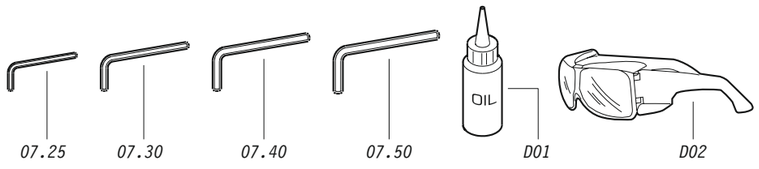

MCF.12

cod. 1749200

Note - Notes

Caricamento - Loading

Caricamento da sotto
Bottom load magazine

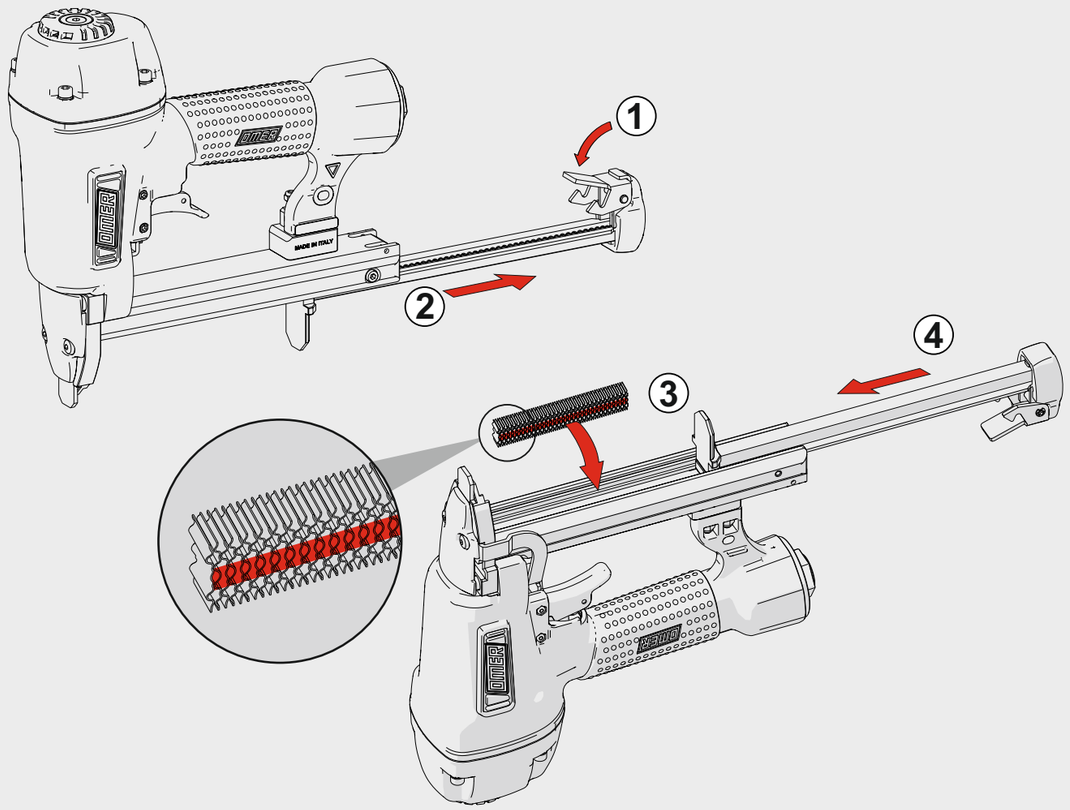

Verso di caricamento - Loading verse

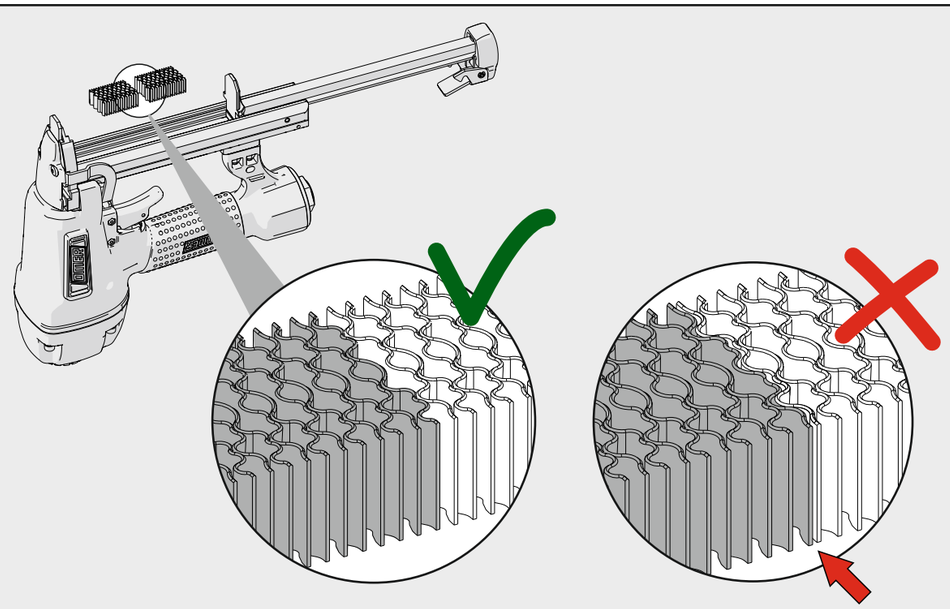

Parti di ricambio - Spare parts - Ersatzteile - Pièces de rechange - Piezas de repuesto
Ανταλλακτικα - Partes sobresselentes - Wisselstukken - Reservedele

Cod.	Descrizione	*Description*
00.11	O-Ring	*O-Ring*
00.14	O-Ring	*O-Ring*
00.15.2	O-Ring	*O-Ring*
00.18	O-Ring	*O-Ring*
00.22	O-Ring	*O-Ring*
00.45	O-Ring	*O-Ring*
01.35	O-Ring	*O-Ring*
01.48	O-Ring	*O-Ring*
01.51	O-Ring	*O-Ring*
01.64	O-Ring	*O-Ring*
02.38.2	O-Ring	*O-Ring*
02.48	O-Ring	*O-Ring*
03.00	Dado	*Nut*
03.30	Dado	*Nut*
04.05.5	Vite	*Screw*
04.06.5	Vite	*Screw*
04.35	Vite	*Screw*
05.00	Dado	*Nut*
05.05.4	Vite	*Screw*
05.25	Vite	*Screw*
05.30	Vite	*Screw*
05.35.2	Vite	*Screw*
06.20.2	Vite	*Screw*
07.25	Chiave esagonale	*Hex. bar wrench*
07.30	Chiave esagonale	*Hex. bar wrench*
07.40	Chiave esagonale	*Hex. bar wrench*
07.50	Chiave esagonale	*Hex. bar wrench*
09.24.1	Anello elastico	*Elastic ring*
10.55	O-Ring	*O-Ring*
17.27	Tappo	*Inlet cap*
21.76	Corpo	*Body*
22.74	Testa	*Head*
25.74	Deflettore scarico	*Exhaust deflector*
26.74	Cilindro	*Cylinder*
27.70	Anello	*Ring*
27.74	Anello cilindro	*Cylinder ring*
28.74	Guarnizione testa	*Head gasket*
30.75.1	Pistone	*Piston*
32.75.5	Ammortizzattore	*Bumper*
40.74	Valvola completa	*Valve assembled*
44.73	Guarnizione cilindro	*Cylinder gasket*
44.74	Ammortizzatore sup.	*Upper bumper*
45.70	Distanziale	*Spacer*
50.74.1	Pulsante completo	*Trigger valve assy*
51.74	Boccola servovalvola	*Servo valve bushing*
53.74	Pistone servovalvola	*Servo valve piston*
54.83	Pulsante	*Trigger valve*
55.74.1	Raccordo pulsante	*Trigger valve bush*
59.75	Distanziale	*Spacer*
64.78.1	Carter sicura	*Safety guard*
68.76	Distanziale	*Spacer*
70.25	Protezione	*Guard*
71.78	Reggicaricatore	*Support*
75.67	Sicura	*Safety*
76.45	Perno molla	*Pin*
77.78	Guida sicura	*Safety guide*
81.78.1	Grilletto comando SQ	*SQ Trigger*
86.74	Boccola	*Bushing*
87.46	Perno molla	*Pin*
90.07	Molla	*Spring*
90.76.1	Piastra	*Plate*
91.21	Molla	*Spring*
91.73	Molla	*Spring*
91.77	Molla	*Spring*
92.73	Molla	*Spring*
93.44.3	Molla	*Spring*
20.70.95	Battente	*Driver*
50.70.95	Caricatore	*Magazine*
60.70.95	Carrello	*Slider*
70.70.95	Spingipunto	*Pusher*
80.70.95	Controtestina	*Nose*
90.70.95	Testina	*Nose plate*
D01	Boccetta olio	*Oiler*
D02	Occhiali protettivi	*Protective goggles*

Guarnizioni - O-Rings - Dichtungen - Joints - Kit O-Rings - O-ringen - Pakninger - Λαστιχακια - Kit O-Rings - O-ringen - Pakninger

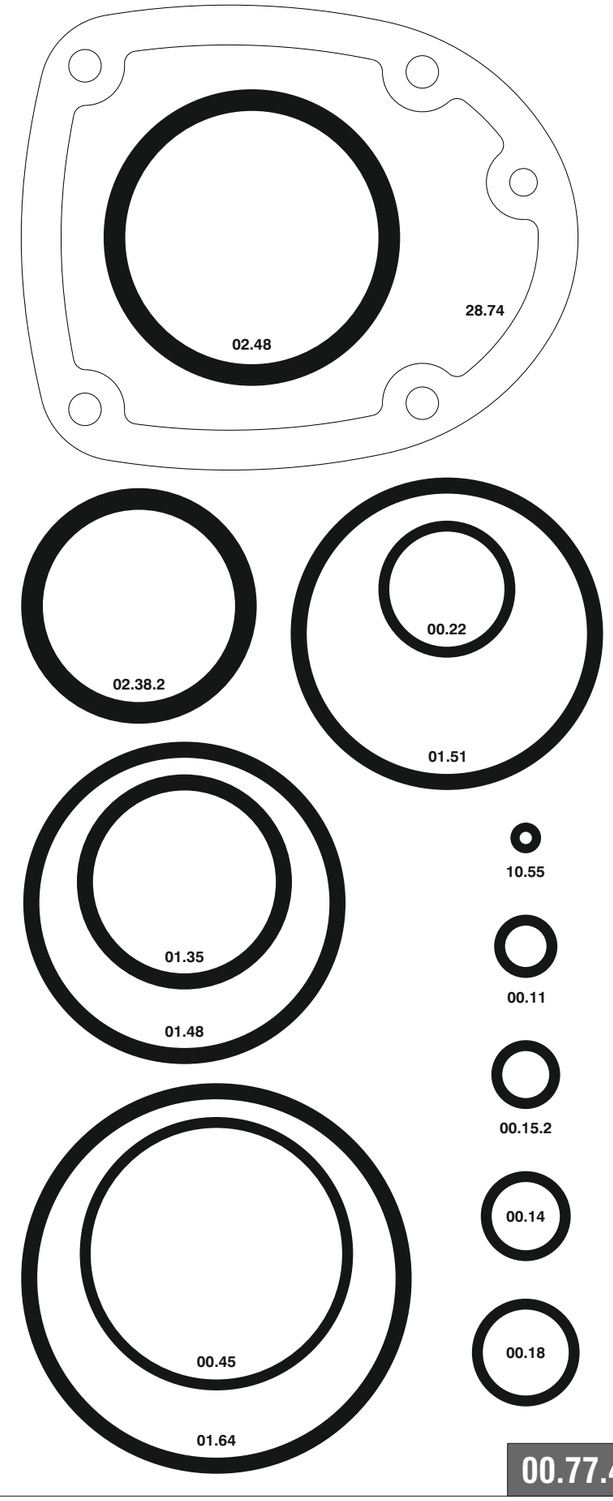

00.77.4

MCF.12 cod. 1749200

Indice di modifica Upgrade number **4**

Azionamento - Actuation

Azionamento sequenziale singolo
Single sequential actuation

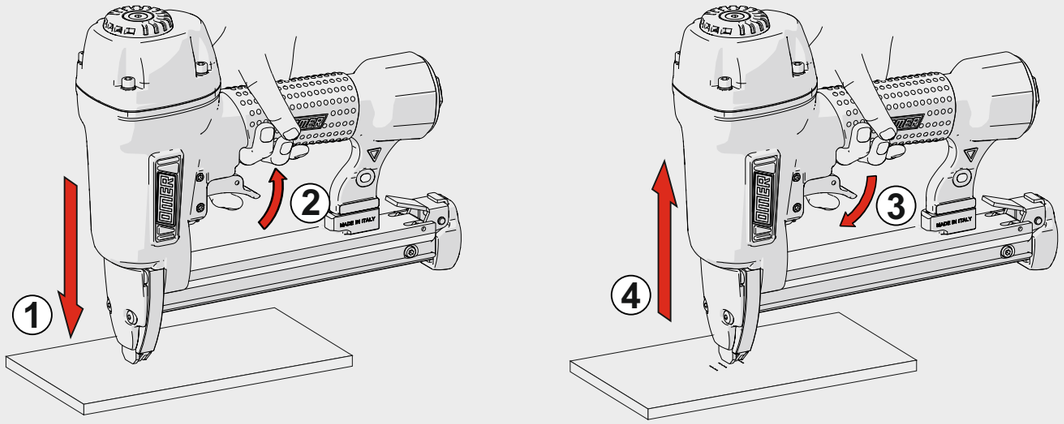

Disinceppamento - Jam clearing

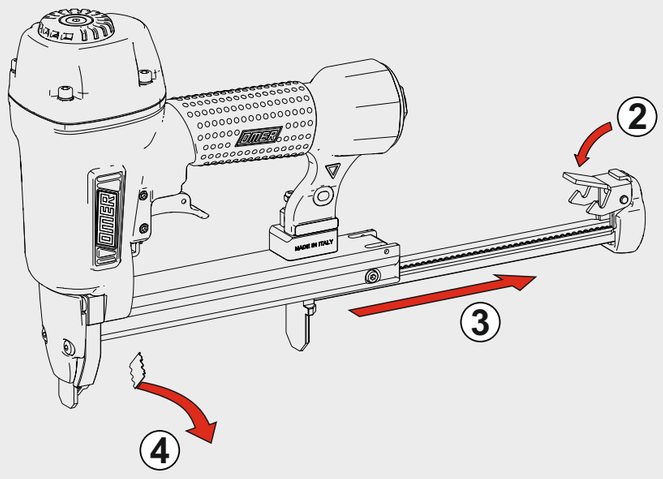

Regolazione misura - Length adjustment

